Electrolux PROFESSIONAL

PROFESSIONAL LAUNDRY

lagoon® Advanced Care

WH6-14LAG and TD6-14LAC

The ideal replacement for any dry-cleaning operation

Features and benefits

Keep customers coming back
Outstanding results for garments of every type thanks to specialized detergents and dedicated programs

Delicate on the delicates
Gentle on fine textiles and wools labelled dry-clean only, as less mechanical action. Woolmark-approved

Rapid return on investment
With a better loading factor, less prespotting, easier finishing and faster process times

Sustainable and eco-friendly
Water-based cleaning with none of the disadvantages of PERC, which can be dangerous to staff

Dry to dry in 1 hour
Smart chemicals and processes mean garments are fully dried in the dryer - no hang-dry

Electrolux PROFESSIONAL

Main specifications				WH6-14LAG
Rated capacity,	Laundry	filling factor 1:9	kg / lb	14 / 30
	Wool	filling factor 1:18	kg / lb	7 / 15
	Silk	filling factor 1:18	kg / lb	7 / 15
Drum,	volume		litre / ft³	130 / 4.6
	diameter		ø mm / inch	650 / 25 9/16
Extraction			rpm	1115
G-factor				450
Heating alternative		electricity	kW	13.0
Consumption data "lagoon"				
Total time	Wool High		min	21
	Wool Medium		min	22
	Silk		min	16
	Synth. mix Medium		min	19
	Synth. mix Low		min	16
	Curtains		min	19
Water consumption (cold+hot)				
	Wool High		litre / gallon	68 / 18
	Wool Medium		litre / gallon	66 / 17
	Silk		litre / gallon	58 / 15
	Synth. mix Medium		litre / gallon	62 / 16
	Synth. mix Low		litre / gallon	58 / 15
	Curtains		litre / gallon	72 / 19
Energy consumption (motor/heating/water)				
	Wool High		kWh	0.85
	Wool Medium		kWh	0.85
	Silk		kWh	0.40
	Synth. mix Medium		kWh	0.80
	Synth. mix Low		kWh	0.70
	Curtains		kWh	0.45
Consumption data ECO 60 1:9*				
Total time			min	65
Water consumption (cold+hot)			litre / gallon	86+5 / 22+1
Energy consumption (motor/heating/hot water)			kWh	0.3/1.75/0.25
Residual moisture			%	45

* Water temperature 15°C cold water and 65°C hot water.

Main specifications				TD6-14LAC			
Rated capacity,	Drying	filling factor 1:18	kg / lb	14.2 / 31.3			
Drum,	volume		litre / gallon	255 / 9.0			
	diameter		ø mm / inch	755 / 29 3/4			
Heating alternative		electricity	kW	13.5			
		gas	BTU/h (kW)	13.5			
		steam at 700 kPa		15.0			
		heat pump	kW	6.5			
Consumption data "lagoon"				El	Gas	Steam	Heat pump
Total time	Wool High*		min	23	25	25	25
	Wool Medium*		min	20	22	22	22
	Synthetic mix**		min	13	15	14	23
Consumption data* **							
Total time			min	25.6	27.9	27.1	35.2
Energy consumption (motor/heating/hot water)			kWh	5.8	6.5	6.8	2.05
Evaporation			g/min / oz/min	226 / 8.0	208 / 7.3	214 / 7.5	165 / 5.8
Energy/Water evaporation			kWh/l / BTU/gallon	1.00 / 12916	1.12 / 14466	1.17 / 15112	0.35 / 4521

* 1:30 load 100% wool load at 30% initial moisture dryed to 0%.
** 1:40 load 100% synthetic load at 20% initial moisture dryed to 0%.
*** At rated capacity 100% cotton load at 50% initial moisture dryed to 0%.

Electrical connections					
Heating alternative	Main voltage	Hz	Heating power kW	Total power kW	Recommended fuse ITCB A
Electric heated	208-240V 1~	60	13.0	13.4	70
	208-240V 3~	60	13.0	13.4	40
	440V 3~	60	13.0	13.4	25
	480V 3 ~	60	13.0	13.4	25
Steam or Non heated	120V 1~	60	*	1.6	20
	208-240V 1~	60	*	1.5	15
	440/480V 1/3~	60	*	1.6	15

* Total power and recommended fuse does not depend on the heating power in those cases.

Water and steam connection		WH6-14LAG
Water valves	DN / inch	20 / 3/4
Water pressure	kPa / psi	200-600 / 30-90
Capacity at 300 kPa	l/min / gallon/min	20 / 5
Drain valve	ø mm / inch	75 / 3
Draining capacity	l/min / gallon/min	170 / 45
Steam valve	DN / inch	15 / 1/2
Steam pressure	kPa / psi	300-600 / 7-40
Liquid detergent supplies		5
Floor requirements		
Frequency of the dynamic force	Hz	18.6
Floor load at max extraction	kN / lbs force	3.1 ± 0.5 / 703 ± 114
Sound levels		
Sound power/pressure level at extraction*	dB(A)	78/62
Sound power/pressure level at wash*	dB(A)	63/48
Heat emission		
% of installed power, max		5
Shipping data**		
Weight	net, kg/lbs	263 / 580
Shipping volume	m^3 / ft^3	1.37 / 48
Accessories		
Steel base		x
Hose kits for water or steam		x
Fluff collector		x
Dimensions in mm / inch		
A Width		910 / 35 13/16
B Depth		820 / 32 5/16
C Height		1325 / / 52 3/16
D1		430 / 16 15/16
D2		490 / 19 5/16
E		1340 / 52 3/4
F		1045 / 41 1/8
G		80 / 3 1/8
H		1245 / 49
I		380 / 14 15/16
J		300 / 11 13/16
K		1205 / 47 7/16
L		1125 / 44 5/16
M		360 / 14 3/16
N		100 / 3 15/16
O		305 / 12
P		340 / 13 3/8
Q		215 / 8 7/16

1 Display
2 Door opening ø 395 mm / 15 9/16 inch
3 Detergent box
4 Cold/Hot water (Detergent box)
5 Cold water
6 Hot water
7 Cold/Hot water or Re-used water with network pressure (option)
8 Re-used water from tank/pump or Liquid detergent supply
9 Drain
10 Liquid detergent supply
11 Electrical connection
12 Steam connection

* Sound power levels measured according to ISO 60704.

** Average data. Crated weight/shipping volume depends on configuration. Please contact logistics for exact measures.

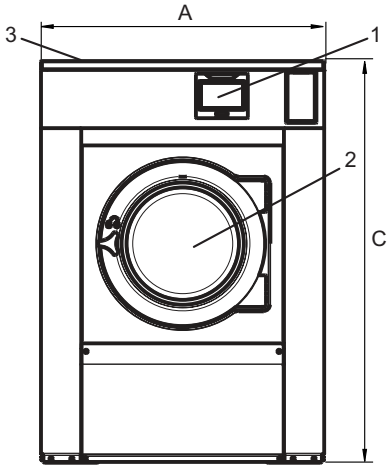

Front

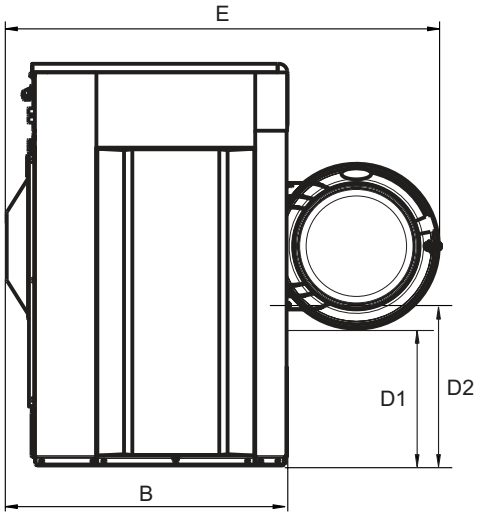

Side view

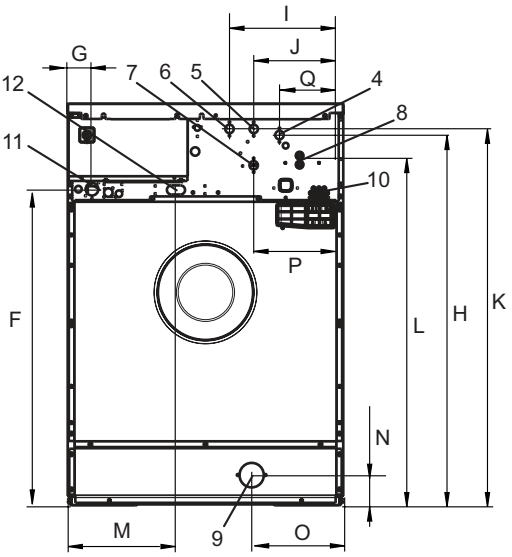

Rear

Electrolux PROFESSIONAL

Electrical connections					
Heating alternative	Main voltage	Hz	Heating power kW	Total power kW	Recommended fuse ITCB A
Electric heated	208–240V 1~	60	6.0	7.0	40
	208–240V 3~	60	13.5	14.5	50
	440V 3~	60	13.5	14.5	25
	480V 3~	60	13.5	14.5	25
Gas heated/ Steam heated	120–480V 1/3~	60	*	1.0	15

* Total power and recommended fuse does not depend on the heating power in those cases.

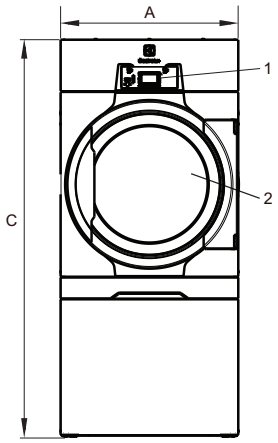

Front

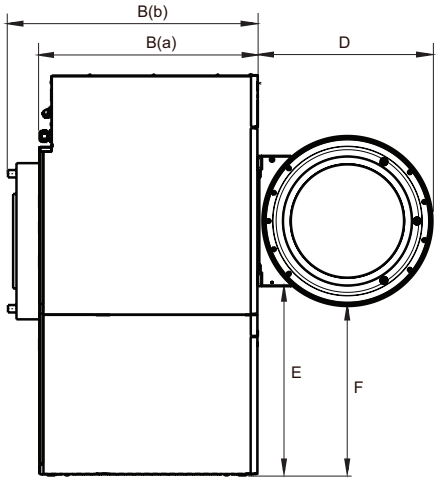

Left side

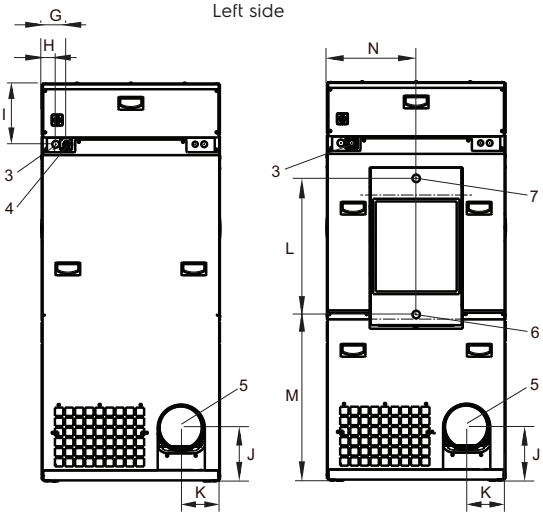

El, gas

Steam

Rear side

Steam, gas and air connections			TD6-14LAC
Steam		ISO 7/1-R	1″
Steam pressure		kPa / psi	100-1000 / 14.5-145
Steam consumption		kg/h / lb/h	25 / 55.1
Condensate		ISO 7/1-R	1″
Gas		ISO 7/1-R	1/2″
Gas pressure			
	Natural gas	Pa / psi	2000 / 0.29
		mbar	20
	Propane	Pa / psi	2800-5000 / 0.41-0.73
		mbar	28-50
Air outlet		ø mm / inch	200 / 7 7/8
Evacuated air,	el 13.5 kW	m^3/h / ft^3/h	460 / 16245
	gas 13.5 kW		460 / 16245
	steam 15.0 kW		460 / 16245
Pressure drop	el 13.5 kW	Max. Pa / psi	650 / 0.094
	gas 13.5 kW		650 / 0.094
	steam 15.0 kW		650 / 0.094
Sound levels			
Sound power/pressure level at drying*		dB(A)	72/56
Heat emission			
% of installed power, max			15
Shipping data**			
Weight		net, kg / lbs	222 / 489
Shipping volume		crated, m^3 / ft^3	1.70 / 60
Dimensions in mm / inch			
A	Width		790 / 31 1/8
B(a)	Depth, el and gas		965 / 38
B(b)	Depth, steam		1105 / 43 1/2
C	Height		1770 / 69 11/16
D			775 / 30 1/2
E			835 / 32 7/8
F			750 / 29 1/2
G			110 / 4 5/16
H			60 / 2 3/8
I			270 / 10 5/8
J			240 / 9 7/16
K			175 / 6 7/8
L			605 / 23 13/16
M			740 / 29 1/8
N			395 / 15 9/16

1 Operating panel
2 Door opening ø 580 mm / 22 13/16 inch
3 Electrical connection on gas heated machines
4 Gas connection/Electrical connection on electrical heated machines
5 Exhaust connection
6 Condensate connection
7 Steam connection

Front and side panels in silver grey and dark blue (color samples can be ordered on part number 472998313).

* Sound power levels measured according to ISO 60704.

** Average data. Crated weight/shipping volume depends on configuration. Please contact logistics for exact measures.

Electrical connections					
Heating alternative	Main voltage	Hz	Heating power kW	Total power kW	Recommended fuse ITCB A
Heat pump	208–240V 1~	60	*	6.5	35
	440/480V 3~	60	*	7.0	10

* Total power and recommended fuse does not depend on the heating power in those cases.

Sound levels	TD6-14LAC
Sound power/pressure level at drying* dB(A)	72/56
Heat emission	
% of installed power, max	15
Shipping data**	
Weight net, kg / lbs	275 / 606
Shipping volume crated, m^3 / ft^3	1.70 / 60
Dimensions in mm / inch	
A(a) Width	790 / 31 1/8
B(a) Depth	965 / 38
B(b) Depth	990 / 39
C Height	1770 / 69 11/16
D	775 / 30 1/2
E	835 / 32 7/8
F	750 / 29 1/2
G	110 / 4 5/16
H	270 / 10 5/8
I	125 / 4 15/16
J	260 / 10 1/4

1 Operating panel
2 Door opening ø 580 mm / 22 13/16 inch
3 Electrical connection
4 Drain for condense water

Front and side panels in silver grey and dark blue (color samples can be ordered on part number 472998313).
* Sound power levels measured according to ISO 60704.
** Average data. Crated weight/shipping volume depends on configuration. Please contact logistics for exact measures.

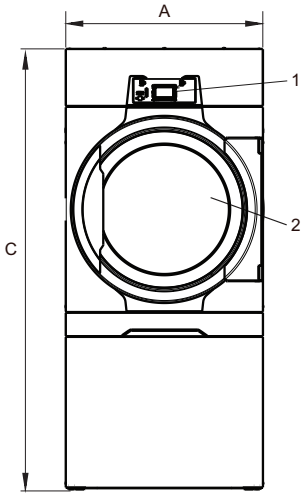

Front

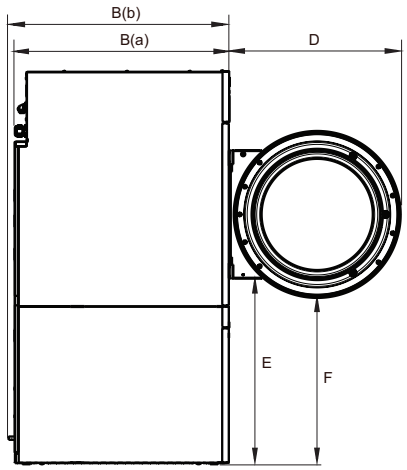

Left side

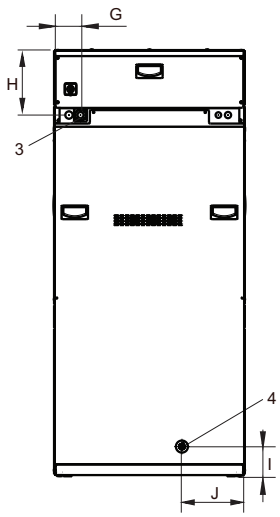

Rear side

Electrolux PROFESSIONAL

Jetsave PNCs	Description
988930001	Complete kit with 2 pumps, 550 ml/min
988930002	Complete kit with 3 pumps, 550 ml/min
988930003	Complete kit with 4 pumps, 550 ml/min
988930004	Complete kit with 5 pumps, 550 ml/min

Acessories PNCs	Description
988916611	Single low level probe
432930071	Extension POWER cable (6m)
432930072	Extension DATA cable (6m)
988930031	ID interface for 3rd part party peristatic pumps or option for Low level alarm
432930065	Joining kit

Power supply
From the washer extractor: 100-240V~ 50/60 Hz / 0.1A (Max)

Water supply
Min. 1.8 bar Max. 6 bar

Electrolux Professional name and description	Packaging 20 litres	Packaging 10 litres
W01 - lagoon Sensitive Detergent Professional detergent for natural/animal fiber	432731085	432731086
W03 - lagoon Sensitive Conditioner Professional conditioner for natural/animal fiber	432731087	432731088
W02 - lagoon Delicate Detergent Professional delicate universal detergent	432731089	432731090

For further information including spotting agents, please refer to the lagoon detergent Product Data Sheet

BASE; closed front and sides

Suitable for models: 988918771	WH6-14LAG
Height:	230 mm / 9 1/16 inch
Material:	Galvanised, silver grey painted steel with stainless steel front panel.

BASE; "floating foundation"

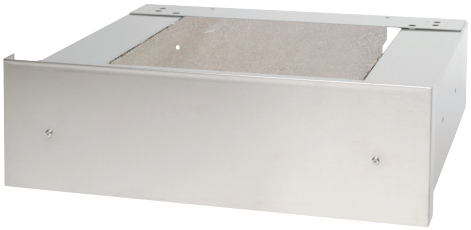

Suitable for models: 988918772	WH6-14LAG
Material:	Galvanised, silver grey painted steel with stainless steel front panel.
Feature:	A "floating foundation" filled with concrete eliminates noise to other parts of the building.

Electrolux PROFESSIONAL

Experience the Excellence
www.electroluxprofessional.com

Art. No. 438913913US/2026.03.11
We reserve the right to alter specifications without notice.